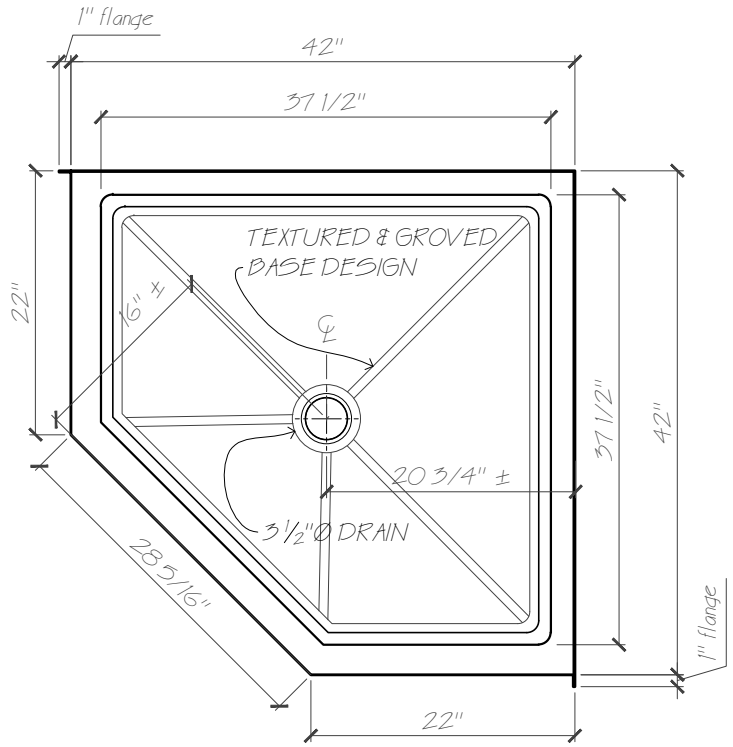

PLAN VIEW

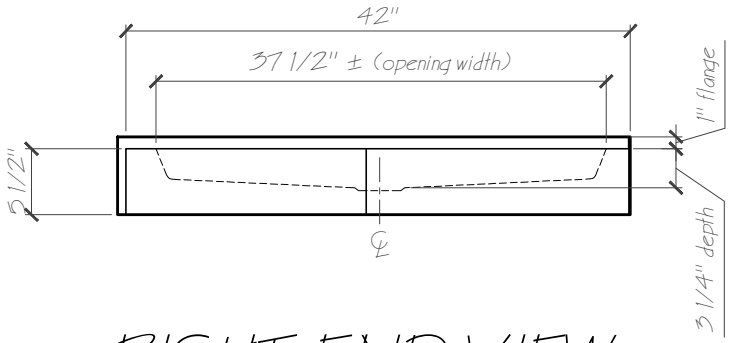

RIGHT END VIEW

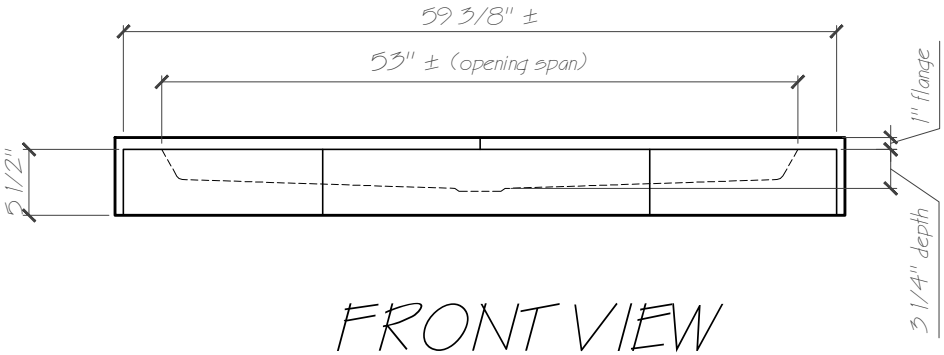

FRONT VIEW

Name: NA42 (Corner Shower Base)	
Date: 14-08-12	Scale: 3/4" =1'
File: NA42-3d.dwg	Drawn: AA Jimenez

GLASS WORLD

Phone: 604-854-5757
Fax: 604-852-1850